Table of Contents

Table of Contents **1**
Chapter One Product Information **2**
1.1 Safety Information and Precautions 2
1.1.1 Symbols and definitions of safety information 2
1.1.2 Scope of Application 2
1.1.3 Safety Precautions for Installation 2
1.2 Product Standards and Specifications 3
1.2.1 Technical Specifications 3
1.2.2 Rated Current Output Table 4
1.2.3 Product Outline and Mounting Hole Dimensions 4
1.2.4 Outline Dimensions of External Keyboard 5
Chapter Two Wiring **6**
2.1 Main Circuit Terminal 6
2.2 Control Circuit Terminal 6
2.3 Basic Wiring 7
2.4 Precautions for Control Circuit Wiring 8
Chapter Three Operation and Display **9**
3.1 Operation Panel 9
3.2 Buttons 9
3.3 Function Indicators 9
Chapter Four Table of Function Parameters **11**
Group P0 - Basic parameters 11
Group P1 - Parameters of Motor 1 13
Group P2 - Vector control parameters of Motor 1 13
Group P3 - V/F control parameters 14
Group P4 - input terminals 15
Group P5 - Output terminals 18
Group P6 - Start/Stop parameters 19
Group P7 - Keyboard and display 20
Group P8 - Auxiliary functions 22
Group P9 - Fault and protection 24
Group PA - PID functions 27
Group Pb - Swing frequency, fixed length and count 28
Group PC - Multi-speed and simple PLC function 29
Group Pd - Communication parameters 30
Group PP - User password 31
Group A5 - Control optimization parameters 31
Group U0 - Monitoring parameters 32
Chapter Five Fault Diagnosis and Solutions **34**
5.1 Faults and Solutions 34
Warranty Agreement **39**
Product Warranty Card **40**

Chapter One Product Information

1.1 Safety Information and Precautions

1.1.1 Symbols and definitions of safety information

Safety information in this user manual is essential for safe use of the frequency converter, to prevent yourself or people around from injury and property in the working area from damage. Please fully understand the following symbols and meanings and observe all precautions before reading this manual.



Danger

Failure to observe this requirement may cause death or serious injury.



Warning

Failure to observe this requirement will cause moderate personal injury or minor injury or some property loss.



Caution

Indicate the precaution for operation or use.

1.1.2 Scope of Application



Caution

This frequency converter is applicable to general-purpose industrial three-phase AC asynchronous motors.



Warning

- This frequency converter must not be used if its fault or working error may threaten the life or do harm to the human body or endanger the equipment (nuclear power control equipment, aerospace equipment, transportation equipment, life support system, safety equipment, weapon system and the like). Please consult our company before using the frequency converter for special purposes.
- This product is manufactured under the strict supervision of the quality management system. When it is used in critical equipment, safety protection measures must be taken to prevent accident spreading in case of any fault.

1.1.3 Safety Precautions for Installation



Danger

- Do not use this product with wet hands.
- Do not connect cables when the power supply is not thoroughly cut off.
- Do not open the cover or connect cables when the frequency converter is powered on. Otherwise, electric shock may be caused.
- Conduct cable connection and inspection in 10min after turning off the power supply. Otherwise, electric shock may be caused.

Warning

- Do not install or use the frequency converter with components damaged or missing, in order to avoid personal injury and property loss.
- Connect main circuit terminals securely with cables. Otherwise, poor contact may cause damage to the frequency converter.
- For the sake of safety, the ground terminal of frequency converter must be grounded. In order to avoid the influence of common grounding impedance interference, multiple frequency converters should be grounded at the same point.

1.2 Product Standards and Specifications

1.2.1 Technical Specifications

Item	Technical Specification		
Output	Output voltage	0V to input voltage	
	Output frequency	Low frequency mode: 0.00Hz~320.00Hz High frequency mode: 0.0Hz ~ 3200.0Hz	
	Carrier frequency	0.8kHz to 16.0kHz (adjustable based on the load)	
	Overload capacity	150%/1min	
Input	Rated voltage/frequency	Single-phase: 220V, 50/60Hz Three-phase: 380V, 50/60Hz	
	Voltage fluctuation range	Three-phase: 380V±15%. Allowable range: AC 323V～437V Single-phase: 220V±15%. Allowable range: AC 187V～253V	
	Frequency fluctuation range	±5%	
Control performance	et frequency resolution	Digital setting	0.01Hz
		Analog setting	Maximum frequency × 0.025%
	Control mode	V/F control, sensorless vector control (SVC)	
	Starting torque	SVC	0.25Hz/150% rated torque
	Speed control range	SVC	1: 200
	Steady-state velocity accuracy	SVC	Maximum speed ± 0.5%
	Torque lift	Torque lift 0.0% to 30.0%	
	V/F curve	Linear, multi-point, V/F complete separation and V/F semi-separation	
	Cycle-by-cycle current limit	Fast response and normal operation in the V/F mode	
	Acceleration and deceleration curve	Linear or S-curve acceleration and deceleration; 4 kinds of acceleration and deceleration time, 0.1s to 6,500.0s	
	Automatic voltage regulation	Automatically maintain the constant output voltage in case of changes in grid voltage	
	DC braking	DC braking frequency: 0.00 Hz ~ Maximum frequency DC braking current: 0.0%~100.0% DC braking time: 0.0s~100.0s	
	Jog control	Jog frequency range: 0.00 Hz ~ Maximum frequency Jog acceleration and deceleration time: 0.1s~6500.0s	
	PLC and multi-speed	Built-in PLC function, supporting 16 speeds at most	
	Overvoltage/overcurrent stall control	Automatic limit of running current and voltage to prevent frequent tripping	
	Torque limit and control	Automatic limit of torque current, for torque control in vector control mode	

Control input	Running command	Operation panel, control terminal and serial communication setting, for switching of multiple modes	
	Primary frequency command	Digital setting, analog voltage setting, analog current setting, pulse setting and communication setting, for switching of multiple modes	
	Auxiliary frequency command	Combined with the primary frequency for fine tuning and synthesis of frequency	
Output signal	Input terminal	■ Keyboard potentiometer input, 0-5V ■ 5 programmable input terminals, with one supporting high speed pulse input up to 50 KHZ ■ One AI terminal supporting 0-10 V voltage input	
	Output terminal	■ One high speed pulse output terminal (or programmable open collector output) ■ One programmable relay output ■ Two AO outputs, one supporting 0-10V voltage output and the other supporting 0-20mA or 4-20mA current output	
	Serial communication port	RS-485 port	
Protection function	Overvoltage, undervoltage, overcurrent, current limiting, overload, overheat, electronic thermal overload relay, overvoltage stall, data protection, etc.		
Display	5-digit digital display (LED) and status indicator	Parameter setting: Display the parameter number and value	Function code, data, status
		Running display: running frequency, current, etc.	
		Fault display: fault code	

1.2.2 Rated Current Output Table

Model	Power (kW)	Voltage (V)	Output power (A)
0.75S1-220V	0.75	Single-phase 220V	4
1.5S1-220V	1.5		7
2.2S1-220V	2.2		9.6
0.75G3-380V	0.75	Three-phase 380V	2.1
1.5G3-380V	1.5		3.8
2.2G3-380V	2.2		5.1
4.0G3-380V	4.0		9
5.5G3-380V	5.5		13

1.2.3 Product Outline and Mounting Hole Dimensions

1) 0.75kW~2.2kW

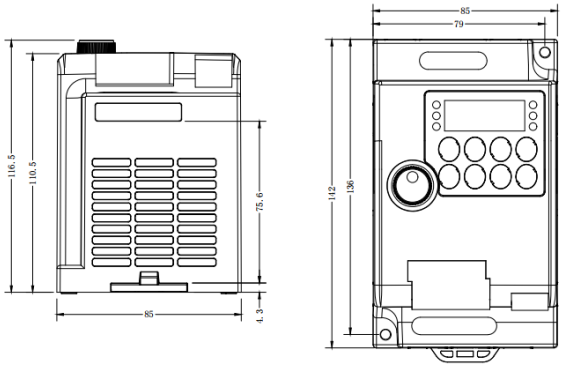

2) 4.0kW~5.5kW

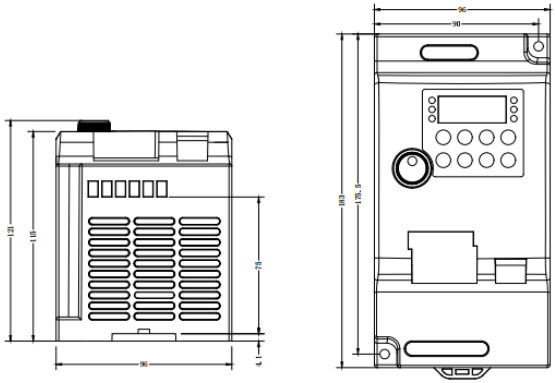

1.2.4 Outline Dimensions of External Keyboard

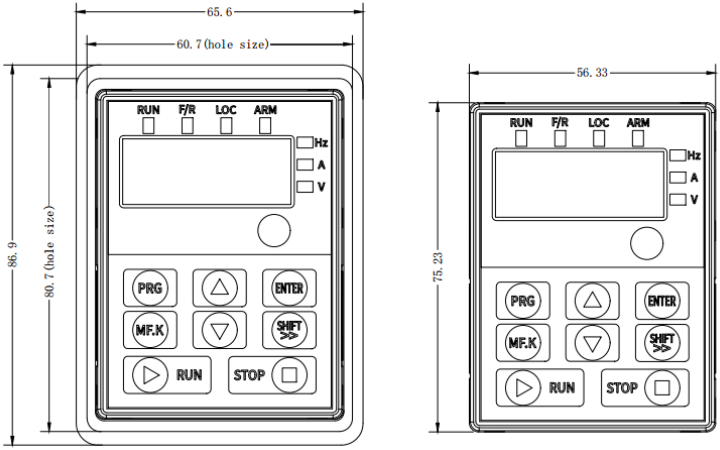

Chapter Two Wiring

2.1 Main Circuit Terminal

- Layout of main circuit terminals

1) 0.75kW~2.2kW AC 220V

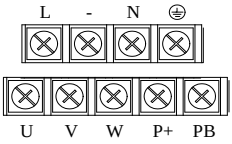

2) 0.75kW~5.5kW AC 380V

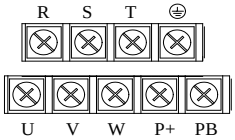

- Function description of main circuit terminals

Terminal Symbol	Terminal Name	Function Description
P+, PB	Braking resistor connector terminal	Connect one end of the brake resistor to P+ and the other end of PB
R, S, T/ L, N	AC power input terminal	Connect AC 380V terminal to three-phase AC power supply of power grid (R, S, T) Connect AC 220V terminal to single-phase AC power supply (L, N)
U, V, W	Three-phase AC output terminal	Connect to three-phase AC motor
⏚	Ground terminal	Grounding

2.2 Control Circuit Terminal

- Layout of control circuit terminals

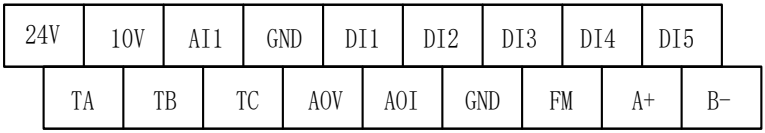

- Function description of control circuit terminals

Category	Terminal Symbol	Function Description	Specification
Multi-function digital input terminal	DI1	It is available when X (DI1, DI2, DI3, DI4) is short-circuited to COM, and its function is defined by parameters P4-00 to P4-03. The common terminal is GND.	INPUT, 0-24V level signal, low level active, 5mA.
	DI2		
	DI3		
	DI4		

	DI5	DI5 can be used as a common multi-function terminal and programmed as a high-speed pulse input port. See the function codes P4-28 to P4-32 for details.	INPUT, 0-24V level signal, low level active, 5mA.
Digital signal output terminal	FM	It can be set as a multi-function programmable open collector output terminal and programmed as a multi-function switching output terminal. Common terminal: GND. Set the high-speed pulse output by parameters P5-00 and P5-09.	OUTPUT, maximum load current of no more than 50mA.
Analog input/output terminal	AI1	AI1 receives analog voltage/current input, depending on P4-39. Reference ground terminal: GND.	INPUT. Input voltage range: 0-10V (input impedance: 100KΩ). Input current range: 0-20mA (input impedance: 500Ω).
	AOV	AOV only provides voltage input. Reference ground terminal: GND.	OUTPUT, 0-10V DC voltage. The output voltage of the AO1 terminal is the PWM waveform from the CPU. The output voltage is proportional to the PWM waveform width.
	AOI	AOI only provides the analog current output, depending on P5-23. See the function code P5-07 for details. Reference ground terminal: GND.	OUTPUT, 0-20mA or 4-20mA.
Relay output terminal	TA	It can be programmed as a multi-function relay output terminal. See the function description of P5-02 output terminal.	TA1-TB1: normally closed; TA1-TC1: normally open. Contact capacity: 250VAC/2A(COSΦ=1), 250VAC/1A(COSΦ=0.4), 30VDC/1A.
	TB		
	TC		
Power port	+24V	24V power supply for digital signal input terminals	Maximum output current 200mA
	+10V	10V power supply for analog input and output terminals	Maximum output current 20mA
	GND	Power reference ground terminal	-
Communication port	A+	RS485 signal+ terminal	Standard RS485 communication port, which is not isolated from GND. Use twisted pair cables or shielded cables.
	B-	RS485 signal- terminal	

2.3 Basic Wiring

Wiring of the frequency converter is divided into main circuits and control circuits. Users can lift the cover to see main circuit terminals and control circuit terminals. Connect cables according to the following wiring circuits.

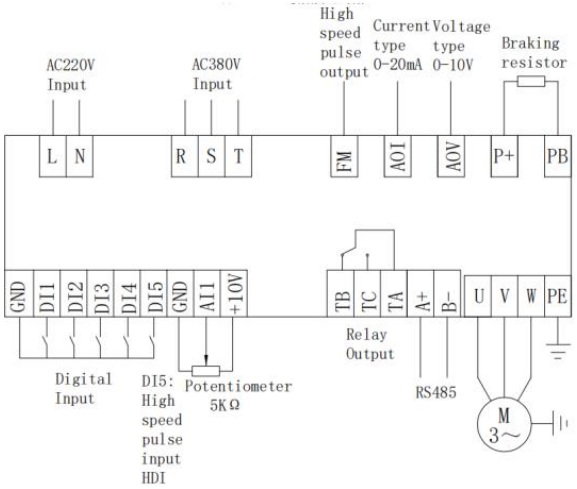

Figure 2-1 Basic Wiring Diagram

2.4 Precautions for Control Circuit Wiring

Do not keep signal cables and main circuit cables in the same slot. Otherwise, interference may occur. Signal cables should be shielded cables (size: 0.5mm² to 2mm²) that are grounded at one end. Shields cables of Group 1 are recommended for control cables. Use control terminals on the control panel correctly as required.

Chapter Three Operation and Display

3.1 Operation Panel



Figure 3-1 Schematic Diagram of Operation Panel

As shown in the figure above, the operation panel can be used for parameter setting/modification, working status monitoring, running control (start and stop) and other operations of the frequency converter.

3.2 Buttons

Button Symbol	Name	Function Description
PRG	Programming button	Level 3 menu operation mode: Press it in the Level 0 menu mode to enter the Level 1 menu. If it is pressed in other modes, the system will go back to the previous menu.
ENTER	ENTER button	Press it in the Level 1 and 2 menu mode to enter the menu at next level. If it is pressed in the Level 3 mode, parameter settings will be confirmed.
▲	Increase button	Increase the function code, menu group or set parameter value.
▼	Decrease button	Decrease the function code, menu group or set parameter value.
SHIFT/>>	Shift button	Press it in the Level 0 menu mode to cyclically change running/shutdown monitoring parameters. If it is pressed in the programming mode, the modified bit will change.
RUN	Run button	Press it in the keyboard control mode to start the frequency converter.
STOP/REST	STOP/REST button	Press it in the running mode to shut down the system. In the fault alarm mode, it is used to reset the system.
M-FUNC	Multi-function button	Change functions according to P7-01 settings.

3.3 Function Indicators

Indicator Name	Description
Hz	Frequency unit
A	Current unit
V	Voltage unit
RPM(Hz+A)	Speed unit
%(A+V)	Percentage
LOC	LOCAL/REMOT: Keyboard operation, terminal operation and remote operation (communication control) indicator LOCAL/REMOT OFF: Panel start/stop control

	LOCAL/REMOT NO: Terminal start/stop control LOCAL/REMOT flashing: Communication start/stop control
F/R	Forward and reverse running indicator. If this indicator is ON, the product is in the forward running status. If this indicator is flashing, the product is in the reverse running status.
RUN	If this indicator is OFF, the frequency converter is shut down. If this indicator is ON, the frequency converter running.

Chapter Four Table of Function Parameters

PP-00 for user password setting: If the value is not zero, users must enter the correct password to enable the function parameter and parameter change mode. Set PP-00 to zero to cancel the user password.

The user password is only for panel locking. After the password is set, parameters can be read and written via the keyboard. It is necessary to enter the password to enable the system again after each exit. In the communication mode, direct reading and writing without password is supported (except for PP and PF groups).

Note: Groups P and d consist of basic function parameters, and Group U consists of monitoring function parameters. The attribute symbols in the parameter table are described as follows:

*: Data generated by the frequency converter, read-only;

+: Parameters can only be modified during downtime;

#: Parameters can be modified during running and downtime.

Group P0 - Basic parameters

Parameter number	Name	Setting range	Factory default value	Attribute
P0-00	G/P type	1: G type (constant torque load type)	Depending on the model	+
P0-01	Control mode of Motor 1	0: Sensorless vector control (SVC) 2: V/F control	2	+
P0-02	Running command selection	0: Panel command channel (LOC off) 1: Terminal command channel (LOC on) 2: Communication command channel (LOC flashing)	0	#
P0-03	Primary frequency source X selection	0: Digital setting (preset frequency P0-08, UP/DOWN, modifiable, no memory of power failure) 1: Digital setting (preset frequency P0-08, UP/DOWN, modifiable, with memory of power failure) 2: AI1 3: AI2 local potentiometer 4: AI3 external keyboard potentiometer 5: HDI pulse setting (DI5) 6: Multi-speed 7: Simple PLC 8: PID 9: Communication setting	3	+
P0-04	Auxiliary frequency source Y selection	Same as P0-03 (primary frequency source X selection)	0	+
P0-05	Auxiliary frequency source reference in superposition	0: relative to maximum frequency 1: relative to primary frequency	0	#
P0-06	Auxiliary frequency Y gain in superposition	0%~150%	100%	#
P0-07	Operation of primary and auxiliary frequency superposition	Units digit: Frequency command selection 0: Primary frequency X 1: Operation result of primary and auxiliary frequencies (determined by the tens digit) 2: switching between primary frequency X and auxiliary frequency Y	00	#

		3: switching between primary frequency X and operation result of primary and auxiliary frequencies 4: switching between auxiliary frequency Y and operation result of primary and auxiliary frequencies Tens digit: Operation of primary and auxiliary frequencies according to frequency command 0: primary + auxiliary 1: primary - auxiliary 2: greater of the two values 3: smaller of the two values 4: primary x auxiliary		
P0-08	Digital frequency setting	0.00 Hz ~ Maximum frequency (P0-10)	50.00Hz	#
P0-09	Motor rotation direction	0: default direction 1: opposite to default direction	0	#
P0-10	Maximum frequency	50.00Hz~320.00Hz(P0-22=2) 50.0Hz~3200.0Hz(P0-22=1)	50.00Hz	+
P0-11	Upper limit frequency command selection	0: P0-12 setting 1: AI1 2: AI2 local potentiometer 3: AI3 external keyboard potentiometer 4: HDI pulse setting (DI5) 5: Communication setting	0	+
P0-12	Upper limit frequency	Lower limit frequency P0-14 to maximum frequency P0-10	50.00Hz	#
P0-13	Upper limit frequency bias	0.00 Hz ~ Maximum frequency P0-10	0.00Hz	#
P0-14	Lower limit frequency	0.00Hz ~ Upper limit frequency P0-12	0.00Hz	#
P0-15	Carrier frequency	0.5kHz～16.0kHz	Depending on the model	#
P0-16	Carrier frequency adjustment by temperature	0: No; 1: Yes	0	#
P0-17	Acceleration time 1	0.00~65000s	Depending on the model	#
P0-18	Deceleration time 1	0.00~65000s	Depending on the model	#
P0-19	Unit of acceleration and deceleration time	0: 1s; 1: 0.1s; 2: 0.01s	1	+
P0-21	Bias of auxiliary frequency Y in superposition	0.00 Hz ~ Maximum frequency P0-10	0.00Hz	#
P0-22	Frequency command resolution	1: 0.1Hz; 2: 0.01Hz	2	+
P0-23	Stop memory selection of digital frequency setting	0: No memory; 1: Memory	0	#
P0-24	Retain	-	1	+
P0-25	Reference frequency of acceleration and deceleration time	0: Maximum frequency (P0-10) 1: Set frequency 2: 100Hz	0	+

P0-26	UP/DOWN frequency command reference	0: Running frequency; 1: Set frequency	0	+
P0-27	Primary frequency command selection of running command binding	Units digit: Frequency source selection of operation panel binding 0: No binding 1: Set digital frequency 2: AI1 3: AI2 local potentiometer 4: AI3 external keyboard potentiometer 5: HDI pulse setting (DI5) 6: Multi-speed 7: Simple PLC 8: PID 9: Communication setting Tens digit: Frequency source selection of terminal binding Hundreds digit: Frequency source selection of communication binding	000	#

Group P1 - Parameters of Motor 1

Parameter number	Name	Setting range	Factory default value	Attribute
P1-00	Motor type selection	0: Ordinary asynchronous motor; 1: variable-frequency asynchronous motor	0	+
P1-01	Rated power of motor	0.1kW~1000.0kW	Depending on the model	+
P1-02	Rated voltage of motor	1V~2000V	Depending on the model	+
P1-03	Rated current of motor	0.01A~655.35A	Depending on the model	+
P1-04	Rated frequency of motor	0.01 Hz ~ Maximum frequency	Depending on the model	+
P1-05	Rated speed of motor	1rpm~65535rpm	Depending on the model	+
P1-10	No-load current	0.01A~P1-03	Tuning parameter	+
P1-37	Tuning selection	0: no operation 1: Partial standstill tuning of asynchronous motor 2: Complete dynamic tuning of asynchronous motor 3: Complete standstill tuning of asynchronous motor	0	+

Group P2 - Vector control parameters of Motor 1

Parameter number	Name	Setting range	Factory default value	Attribute
P2-00	Proportional gain 1 of speed ring	1~100	30	#

P2-01	Integral time 1 of speed ring	0.01s~10.00s	0.50s	#
P2-02	Switching frequency 1	0.00~P2-05	5.00Hz	#
P2-03	Proportional gain 2 of speed ring	1~100	20	#
P2-04	Integral time 2 of speed ring	0.01s~10.00s	1.00s	#
P2-05	Switching frequency 2	P2-02 to maximum frequency	10.00Hz	#
P2-06	Vector control slip gain	50%~200%	100%	#
P2-07	SVC speed feedback filtering time	0.000s~0.100s	0.015s	#
P2-09	Upper limit selection of torque in speed control mode (motor)	0: parameter P2-10 setting 1: AI1 2: AI2 local potentiometer 3: AI3 external keyboard potentiometer 4: Pulse (DI5) 5: Communication setting 6: MIN(AI1, AI2) 7: MAX(AI1, AI2) P2-10 corresponding to the full range of Items 1-7	0	#
P2-10	Digital setting of upper limit of torque in speed control mode (motor)	0.0%~200.0%	150.0%	#
P2-13	Proportional gain of excitation control	0~60000	2000	#
P2-14	Integral gain of excitation control	0~60000	1300	#
P2-15	Proportional gain of torque control	0~60000	2000	#
P2-16	Integral gain of torque control	0~60000	1300	#
P2-17	Integral attribute of speed ring	Units digit: Integral separation 0: Void 1: Enable	0	#

Group P3 - V/F control parameters

Parameter number	Name	Setting range	Factory default value	Attribute
P3-00	V/F curve setting	0: Linear V/F 1: Multi-point V/F 2: Square V/F 3: 1.2 power V/F 4: 1.4 power V/F 6: 1.6 power V/F 8: 1.8 power V/F 9: Retain 10: V/F complete separation mode 11: V/F semi-separation mode	0	+
P3-01	Torque lift	0.0%~30.0%	Depending on the model	#

P3-02	Torque lift cutoff frequency	0.00 Hz ~ Maximum frequency	50.00Hz	+
P3-03	Multi-point V/F frequency point 1	0.00Hz~P3-05	0.00Hz	+
P3-04	Multi-point V/F voltage point 1	0.0%~100.0%	0.0%	+
P3-05	Multi-point V/F frequency point 2	P3-03~P3-07	0.00Hz	+
P3-06	Multi-point V/F voltage point 2	0.0%~100.0%	0.0%	+
P3-07	Multi-point V/F frequency point 3	P3-05 to rated frequency of motor (P1-04)	0.00Hz	+
P3-08	Multi-point V/F voltage point 3	0.0%~100.0%	0.0%	+
P3-10	V/F overexcitation gain	0~200	64	#
P3-11	V/F oscillation suppression gain	0-100	40	#
P3-13	V/F separated voltage source	0: Digit setting (P3-14) 1: AI1 2: AI2 local potentiometer 3: AI3 external keyboard potentiometer 4: HDI input pulse (DI5) 5: Multi-speed 6: Simple PLC 7: PID 8: Communication setting Note: 100.0% corresponding to the rated voltage of motor	0	#
P3-14	V/F separated digital voltage setting	0 V ~ Rated voltage of motor	0V	#
P3-15	V/F separated voltage acceleration time	0.0s ~ 1000.0s Note: Represent the time required for voltage rise from 0V to the rated voltage of motor.	0.0s	#
P3-16	V/F separated voltage decelerating time	0.0s ~ 1000.0s Note: Represent the time required for voltage rise from 0V to the rated voltage of motor.	0.0s	#
P3-17	V/F separation stop mode selection	0: Separate frequency/voltage decrease to 0 1: Frequency decreases after voltage decrease to 0	0	#

Group P4 - input terminals

Parameters	Name	Setting range	Factory default value	Attribute
P4-00	DI1 terminal function selection	0: No function 1: Forward running FWD 2: Reverse running REV [Note]: It should be used together with P4-11 when it is set to 1 or 2. 3: Three-wire running terminal 4: Forward jog (FJOG)	1	+
P4-01	DI2 terminal function selection		2	+
P4-02	DI3 terminal function selection		4	+

P4-03	DI4 terminal function selection	5: Reverse jog (RJOG) 6: UP terminal 7: DOWN terminal	9	+
P4-04	DI5 terminal function selection	8: Free stop terminal 9: Fault reset terminal 10: Pause 11: External fault normally open input 12: Multi-speed terminal 1 13: Multi-speed terminal 2 14: Multi-speed terminal 3 15: Multi-speed terminal 4 16: Acceleration and deceleration time terminal 1 17: Acceleration and deceleration time terminal 2 18: Frequency command switching 19: UP/DOWN clearing (terminal and keyboard) 20: Control command switching terminal 1 21: Acceleration and deceleration disabled 22: PID pause 23: Simple PLC state resetting 24: Swing frequency pause 25: Counter input 26: Counter reset 27: Length count input 28: Length reset 29: Torque control disabled 30: Pulse frequency input (valid for DI5 only) 31: Retain 32: DC brake terminal 33: NC input for external fault 34: Frequency change enabled 35: PID forward and reverse switching 36: External stop terminal 1 37: Control command switching terminal 2 38: PID integration pause 39: Switching between primary frequency and digital frequency setting 40: Switching between auxiliary frequency and digital frequency setting 41: Motor 1/2 selection terminal 42: Retain 43: PID parameter switching 44: User-defined fault 1 45: User-defined fault 2 46: Speed control/torque control switching 47: Quick stop 48: External stop terminal 2 49: DC brake for deceleration 50: Running time cleared	12	+
P4-10	Filtering time of terminals DI1 to DI5	0.000s~1.000s	0.010s	#
P4-11	Terminal control mode	0: 2-wire system 1 1: 2-wire system 2 2: 3-wire system 1 3: 3-wire system 2	0	+
P4-12	UP/DOWN terminal rate	0.001Hz/s~65.535Hz/s	1.000Hz/s	#
P4-13	Minimum input of AI Curve 1	0.00V~P4-15	0.00V	#

P4-14	Minimum input setting of AI Curve 1	-100.0%~+100.0%	0.0%	#
P4-15	Maximum input of AI Curve 1	P4-13~+10.00V	10.00V	#
P4-16	Maximum input setting of AI Curve 1	-100.0%~+100.0%	100.0%	#
P4-17	Filtering time of AI1	0.00s~10.00s	0.10s	#
P4-18	Minimum input of AI Curve 2	0.00V~P4-20	0.00V	#
P4-19	Minimum input setting of AI Curve 2	-100.0%~+100.0%	0.0%	#
P4-20	Maximum input of AI Curve 2	P4-18~+10.00V	10.00V	#
P4-21	Maximum input setting of AI Curve 2	-100.0%~+100.0%	100.0%	#
P4-22	Filtering time of AI2 local potentiometer	0.00s~10.00s	0.10s	#
P4-23	Minimum input of AI Curve 3	-10.00V~P4-25	-10.00V	#
P4-24	Minimum input setting of AI Curve 3	-100.0%~+100.0%	-100.0%	#
P4-25	Maximum input of AI Curve 3	P4-23~+10.00V	10.00V	#
P4-26	Maximum input setting of AI Curve 3	-100.0%~+100.0%	100.0%	#
P4-27	Filtering time of AI3 external keyboard potentiometer	0.00s~10.00s	0.50s	#
P4-28	Minimum frequency of pulse input	0.00kHz~P4-30	0.00kHz	#
P4-29	Minimum input frequency setting of pulse	-100.0%~100.0%	0.0%	#
P4-30	Maximum input frequency of pulse	P4-28~100.00kHz	50.00kHz	#
P4-31	Maximum input frequency setting of pulse	-100.0%~100.0%	100.0%	#
P4-32	Pulse filtering time	0.00s~10.00s	0.10s	#
P4-33	AI curve selection	Units digit: AI1 curve selection 1: Curve 1 (2 points, P4-13 to P4-16) 2: Curve 2 (2 points, P4-18 to P4-21) 3: Curve 3 (2 points, P4-23 to P4-26) 4: Curve 4 (4 points, A6-00 to A6-07) 5: Curve 5 (4 points, A6-08 to A6-15) Tens digit: Curve selection of AI2 local potentiometer, the same as above Hundreds digit: Curve selection of AI3 external keyboard potentiometer, the same as above	321	#
P4-34	AI below minimum input setting	Units digit: AI1 below minimum input setting 0: Corresponding minimum input setting 1: 0.0%	000	#

		Tens digit: AI2 local potentiometer below minimum input setting, the same as above Hundreds digit: AI3 external keyboard potentiometer below minimum input setting, the same as above		
P4-35	DI1 delay time	0.0s~3600.0s	0.0s	+
P4-36	DI2 delay time	0.0s~3600.0s	0.0s	+
P4-37	DI3 delay time	0.0s~3600.0s	0.0s	+
P4-38	Logical selection of terminals DI1 to DI5	0: High level active 1: Low level active Units digit: DI1 Tens digit: DI2 Hundreds digit: DI3 Thousands digit: DI4 Ten thousand digit: DI5	00000	+
P4-39	AI1 input voltage/current selection	0: Voltage input; 1: Current input	0	+

Group P5 - Output terminals

Parameters	Name	Setting range	Factory default value	Attribute
P5-00	FM terminal output mode selection	0: Pulse output (FMP) 1: Switching output (FMR)	0	#
P5-01	FMR function selection of FM terminal (open collector output terminal)	0: No output 1: The frequency converter is running 2: Fault output (fault with free shutdown) 3: Frequency detection value 1 4: Frequency reached 5: Zero speed running (no output in downtime) 6: Motor overload warning 7: Converter overload alarm 8: Set value reached 9: Specified value reached 10: Length reached 11: Simple PLC cycle completed 12: Cumulative running time reached 13: Frequency limit 14: Torque limit 15: Ready for running 16: AI1>AI2 17: Upper limit of frequency reached 18: Lower limit of frequency reached (no output in downtime) 19: Undervoltage status 20: Communication setting 21: Retain 22: Retain 23: Zero speed running 2 (with output in downtime) 24: Cumulative power-on time reached 25: Frequency detection value 2 26: Frequency 1 reached 27: Frequency 2 reached 28: Current 1 reached 29: Current 2 reached 30: Set time reached	0	#
P5-02	RELAY1 function selection		2	#

		31: AI1 input over-limit 32: Load drop 33: Reverse running 34: Zero current status 35: Module temperature reached 36: Output current over-limit 37: Lower limit of frequency reached (with output in downtime) 38: Alarm (all faults) 39: Retain 40: Running time reached 41: Fault output (fault with free shutdown and no undervoltage output)		
P5-06	FMP output function selection of FM terminal	0: Running frequency 1: Set frequency 2: Output current 3: Motor output torque (absolute value, percentage relative to the motor) 4: Output power 5: Output voltage 6: Pulse input (100.0% corresponding to 100.0kHz) 7: AI1 8: AI2 local potentiometer 11: Count 12: Communication setting 13: Motor speed 14: Output current (100.0% corresponding to 1000.0A) 15: Output voltage (100.0% corresponding to 1000.0V) 16: Retain	0	#
P5-07	AOV output function selection		0	#
P5-08	AOI output function selection		1	#
P5-09	Maximum FMP output frequency of FM terminal	0.01kHz~50.00kHz	50.00kHz	#
P5-10	AO1 zero-bias coefficient	-100.0%~+100.0%	0.0%	#
P5-11	AO1 gain	-10.00~+10.00	1.00	#
P5-17	FMR output delay time of FM terminal	0.0s~3600.0s	0.0s	#
P5-18	Closing delay time of RELAY1	0.0s~3600.0s	0.0s	#
P5-19	Disconnection delay time of RELAY1	0.0s~3600.0s	0.0s	#
P5-23	AO1 current output selection	0: 0~20 mA; 1: 4~20mA	0	#

Group P6 - Start/Stop parameters

Parameters	Name	Setting range	Factory default value	Attribute
P6-00	Starting mode	0: Direct start 1: Speed tracking restart 2: Pre-excitation start	0	#
P6-01	Speed tracking mode	0: Start from shutdown frequency 1: Start from power frequency	0	+

		2: Start from maximum frequency		
P6-02	Fast/slow speed tracking	1~100	20	#
P6-03	Start-up frequency	0.00Hz~10.00Hz	0.00Hz	#
P6-04	Start-up frequency holding time	0.0s~100.0s	0.0s	+
P6-05	Start DC braking current	0%~100%	50%	+
P6-06	Start DC braking time	0.0s~100.0s	0.0s	+
P6-07	Acceleration and deceleration mode	0: Linear acceleration and deceleration 1: Acceleration and deceleration A of S curve 2: Acceleration and deceleration B of S curve	0	+
P6-08	Ratio of start time of Curve S	0.0%~(100.0%-P6-09)	30.0%	+
P6-09	Ratio of end time of Curve S	0.0%~(100.0%-P6-08)	30.0%	+
P6-10	Stop mode	0: Deceleration and stop; 1: Free stop	0	#
P6-11	Starting frequency of stop DC braking	0.00 Hz ~ Maximum frequency	0.00Hz	#
P6-12	Holding time for DC brake stop	0.0s~100.0s	0.0s	#
P6-13	Stop DC braking current	0%~100%	50%	#
P6-14	Stop DC braking time	0.0s~100.0s	0.0s	#
P6-15	Energy consumption of braking	0%~100%	100%	#

Group P7 - Keyboard and display

Parameters	Name	Setting range	Factory default value	Attribute
P7-00	Retain			*
P7-01	Function selection of multi-function button	0: Multi-function button unavailable 1: Switching of operation panel, terminal or communication control 2: Switch between forward and reverse 3: Forward jog 4: Reverse jog	0	+
P7-02	Function of STOP/REST key	0: Available in keyboard operation mode only 1: Available in all operation modes	1	#
P7-03	Running display parameter 1	0000~FFFF Bit00: Running frequency 1 (Hz) Bit01: Set frequency (Hz) Bit02: Bus voltage (V) Bit03: Output voltage (V) Bit04: Output power (A) Bit05: Output power (kW) Bit06: Output torque (%) Bit07: Input status of terminal X Bit08: Retain Bit09: AI1 voltage (V)	1F	#

		Bit10: AI2 voltage (V) Bit11: AI3 external keyboard potentiometer voltage (V) Bit12: Count value Bit13: Length value Bit14: Load speed display Bit15: PID setting		
P7-04	Running display parameter 2	0000~FFFF Bit00: PID feedback Bit01: PLC stage Bit02: HDI input pulse frequency (kHz) Bit03: Running frequency 2(Hz) Bit04: Remaining running time Bit05: AI1 voltage (V) before correction Bit06: AI2 voltage (V) before correction Bit07: AI3 external keyboard potentiometer voltage (V) before correction Bit08: Motor speed Bit09: Current power-on time (Hour) Bit10: Current running time (min) Bit11: HDI input pulse frequency (Hz) Bit12: Communication set value Bit13: Encoder feedback speed (Hz) Bit14: Primary frequency display (Hz) Bit15: Auxiliary frequency display (Hz)	00	#
P7-05	Stop display parameter	0000~FFFF Bit00: Set frequency (Hz) Bit01: Bus voltage (V) Bit02: DI terminal input status Bit03: Retain Bit04: AI1 voltage (V) Bit05: AI2 voltage (V) Bit06: AI3 panel potentiometer voltage (V) Bit07: Count value Bit08: Length value Bit09: PLC stage Bit10: Load speed Bit11: PID setting Bit12: HDI input pulse frequency (kHz) Bit13: PID feedback Bit14: Output current Bit15: Retain	33	#
P7-06	Load transmission ratio	0.0001~6.5000	1.0000	#
P7-07	Radiator temperature of inverter module	-30℃ ~120℃	-	*
P7-09	Cumulative running time	0h~65535h	-	*
P7-12	Decimal point of load speed display	Units digit: Number of decimal points of U0-14 0: 0 decimal point 1: 1 decimal point 2: 2 decimal points Tens digit: Number of decimal points of U0-19/U0-29 1: 1 decimal point 2: 2 decimal points	21	#
P7-13	Cumulative power-on time	0-65535h	-	*

P7-14	Cumulative power consumption	0-65535 kWh	-	*

Group P8 - Auxiliary functions

Parameters	Name	Setting range	Factory default value	Attribute
P8-00	Jog frequency	0.00 Hz ~ Maximum frequency	2.00Hz	#
P8-01	Jog acceleration time	0.0s~6500.0s	20.0s	#
P8-02	Jog deceleration time	0.0s~6500.0s	20.0s	#
P8-03	Acceleration time 2	0.00s~6500.0s	Depending on the model	#
P8-04	Deceleration time 2	0.00s~6500.0s	Depending on the model	#
P8-05	Acceleration time 3	0.00s~6500.0s	Depending on the model	#
P8-06	Deceleration time 3	0.00s~6500.0s	Depending on the model	#
P8-07	Acceleration time 4	0.00s~6500.0s	Depending on the model	#
P8-08	Deceleration time 4	0.00s~6500.0s	Depending on the model	#
P8-09	Hopping frequency 1	0.00 Hz ~ Maximum frequency	0.00Hz	#
P8-10	Hopping frequency 2	0.00 Hz ~ Maximum frequency	0.00Hz	#
P8-14	Running mode with set frequency below lower limit of frequency	0: Run at the lower limit frequency 1: Shut down 2: Zero-speed running	0	#
P8-15	Sagging rate	0.00%~10.00%	0.00%	#
P8-16	Set cumulative power-on time reached	0h~65000h	0h	#
P8-17	Set cumulative running time reached	0h~65000h	0h	*
P8-18	Boot protection selection	0: No protection; 1: Protection	0	#
P8-19	Frequency detection value 1	0.00 Hz ~ Maximum frequency	50.00Hz	#
P8-20	Frequency detection hysteresis 1	0.0% to 100.0% (FDT1 level)	5.0%	#
P8-21	Frequency detection amplitude reached	0.0%~100.0% (Maximum frequency)	0.0%	#
P8-25	Switching frequency point of acceleration time 1 and 2	0.00 Hz ~ Maximum frequency	0.00Hz	#

P8-26	Switching frequency point of deceleration time 1 and 2	0.00 Hz ~ Maximum frequency	0.00Hz	#
P8-27	Terminal jog priority	0: Invalid; 1: Valid	0	#
P8-28	Frequency detection value 2	0.00 Hz ~ Maximum frequency	50.00Hz	#
P8-29	Frequency detection hysteresis 2	0.0% to 100.0% (FDT2 level)	5.0%	#
P8-30	Frequency detection value 1 reached	0.00 Hz ~ Maximum frequency	50.00Hz	#
P8-31	Frequency detection amplitude 1 reached	0.0%~100.0% (Maximum frequency)	0.0%	#
P8-32	Frequency detection value 2 reached	0.00 Hz ~ Maximum frequency	50.00Hz	#
P8-33	Frequency detection amplitude 2 reached	0.0%~100.0% (Maximum frequency)	0.0%	#
P8-34	Zero current detection level	0.0% to 300.0%; 100.0% corresponding to the rated current of motor	5.0%	#
P8-35	Zero current detection delay time	0.01s~600.00s	0.10s	#
P8-36	Output current over-limit	0.0% (not detected), 0.1% to 300.0% (rated current of motor)	200.0%	#
P8-37	Output current over-limit detection delay time	0.00s~600.00s	0.00s	#
P8-38	Current 1 reached	0.0% to 300.0% (rated current of motor)	100.0%	#
P8-39	Current 1 amplitude reached	0.0% to 300.0% (rated current of motor)	0.0%	#
P8-40	Current 2 reached	0.0% to 300.0% (rated current of motor)	100.0%	#
P8-41	Current 2 amplitude reached	0.0% to 300.0% (rated current of motor)	0.0%	#
P8-42	Timing function selection	0: Invalid; 1: Valid	0	+
P8-43	Running time selection in timing mode	0: P8-44 setting 1: AI1 2: AI2 local potentiometer 3: AI3 external keyboard potentiometer Analog input range corresponding to P8-44	0	+
P8-44	Running time in timing mode	0.0 min ~6500.0 min	0.0 min	+
P8-45	Lower limit of AI1 input voltage protection	0.00V~P8-46	3.10V	#
P8-46	Upper limit of AI1 input voltage protection	P8-45~11.00V	6.80V	#
P8-47	Module temperature reached	0℃ ~100℃	75℃	#
P8-48	Fan control	0: Fan in service during running; 1: Continuous running of fan	0	+

P8-49	Wake-up frequency	Sleep frequency (P8-51) to maximum frequency (P0-10)	0.00Hz	#
P8-50	Wake-up delay time	0.0s～6500.0s	0.0s	#
P8-51	Sleep frequency	0.00Hz to wake-up frequency (P8-49)	0.00Hz	#
P8-52	Sleep delay time	0.0s～6500.0s	0.0s	#
P8-53	Current running time reached	0.0Min～6500.0Min	0.0Min	+
P8-54	Output power correction factor	0.00%~200.0%	100.0%	#

Group P9 - Fault and protection

Parameters	Name	Setting range	Factory default value	Attribute
P9-00	Motor overload protection selection	0: Disable; 1: Enable	1	#
P9-01	Motor overload protection gain	0.20~10.00	1.00	#
P9-02	Motor overload warning coefficient	50%~100%	80%	#
P9-03	Overvoltage stall gain	0-100	30	#
P9-04	Overvoltage stall protection voltage	Three-phase 380-480V: 650.0V~800.0V; Factory default value: 720.0V Single-phase 200-240V: 330.0V~420.0V; Factory default value: 380.0V	Depending on the model	+
P9-07	Selection of short-circuit protection to ground	Units digit: Selection of short-circuit protection to ground in power-on mode 0: Invalid; 1: Valid Tens digit: Short-circuit protection to ground before running 0: Invalid; 1: Valid	Depending on the model	#
P9-08	Starting voltage of braking unit	Three-phase 380-480V: 650.0V~800.0V; Factory default value: 690.0V Single-phase 200-240V: 330.0V~420.0V; Factory default value: 360.0V	Depending on the model	+
P9-09	Number of automatic fault resets	0~30	0	#
P9-10	Fault output action in automatic fault reset	0: No action; 1: Action	0	#
P9-11	Holding time for automatic fault reset	0.1s~100.0s	1.0s	#
P9-12	Input phase loss/contactor engagement protection selection	Units digit: Input phase loss protection selection 0: Disabled; 1: Active Tens digit: Contactor engagement protection selection 0: Disabled; 1: Active	11	#
P9-13	Output phase loss protection selection	Units digit: Output phase loss protection selection Tens digit: Output phase loss protection selection before running 0: Disable	01	#

		1: Enable		
P9-14	Type of the first fault	0: No fault 1: Retain 2: Acceleration overcurrent 3: Deceleration overcurrent 4: Constant speed overcurrent 5: Acceleration overvoltage 6: Deceleration overvoltage 7: Constant speed overvoltage 8: Buffer resistor overload 9: Undervoltage 10: Converter overload 11: Motor overload 12: Retain 13: Output phase loss 14: Module overheat 15: External fault 16: Communication fault 17: Contactor fault 18: Current detection fault 19: Motor tuning fault 20: Retain 21: Parameter reading and writing fault 22: Frequency converter hardware fault 23: Motor short circuit to ground 24: Retain 25: Retain 26: Running time reached 27: User-defined fault 1 28: User-defined fault 2 29: Power-on time reached 30: Load drop 31: PID feedback is lost at runtime 40: Fast current limiting timeout 41: Motor switching in running 42: Too large speed deviation 43: Motor overspeed 45: Retain 51: Retain	-	*
P9-15	Type of the second fault		-	*
P9-16	Type of the third fault		-	*
P9-17	Frequency of the third (most recent) fault	0.00Hz~655.35Hz	0.00Hz	*
P9-18	Current of the third (most recent) fault	0.00Hz~655.35A	0.00A	*
P9-19	Bus voltage of the third (most recent) fault	0.0V~6553.5V	0.0V	*
P9-20	Input terminal status of the third (most recent) fault	0~9999	0	*
P9-21	Output terminal status of the third (most recent) fault	0~9999	0	*
P9-22	Frequency converter status of the third (most recent) fault	0~65535	0	*

P9-23	Power-on time of the third (most recent) fault	0s~65535s	0s	*
P9-24	Running time of the third (most recent) fault	0.0s~6553.5s	0.0s	*
P9-27	Frequency of the second fault	0.00Hz~655.35Hz	0.00Hz	*
P9-28	Current of the second fault	0.00A~655.35A	0.00A	*
P9-29	Bus voltage of the second fault	0.0V~6553.5V	0.0V	*
P9-30	Input terminal status of the second fault	0~9999	0	*
P9-31	Output terminal status of the second fault	0~9999	0	*
P9-32	Frequency converter status of the second fault	0~65535	0	*
P9-33	Power-on time of the second fault	0s~65535s	0s	*
P9-34	Running time of the second fault	0.0s~6553.5s	0.0s	*
P9-37	Frequency of the first fault	0.00Hz~655.35Hz	0.00Hz	*
P9-38	Current of the first fault	0.00A~655.35A	0.00A	*
P9-39	Bus voltage of the first fault	0.0V~6553.5V	0.0V	*
P9-40	Input terminal status of the first fault	0~9999	0	*
P9-41	Output terminal status of the first fault	0~9999	0	*
P9-42	Frequency converter status of the first fault	0~65535	0	*
P9-43	Power-on time of the first fault	0s~65535s	0s	*
P9-44	Running time of the first fault	0.0s~6553.5s	0.0s	*
P9-47	Fault protection action selection 1	Units digit: Motor overload (F11) 0: Stop in free mode 1: Stop by stop mode 2: Continue to run the tens digit: Retain Hundreds digit: Output phase loss (F13) Thousands digit: External fault (F15) Ten thousand digit: Communication fault (F16)	00000	#
P9-54	Continuous running frequency selection in case of failure	0: Run at the current frequency 1: Run at the set frequency 2: Run at the upper limit frequency 3: Run at the lower limit frequency 4: Run at the abnormal standby frequency	0	#
P9-55	Abnormal standby frequency	0.0% to 100.0% (100.0% corresponding to maximum frequency P0-10)	100.0%	#

P9-59	Instant stop function selection	0: Void 1: Deceleration 2: Stop in deceleration mode	0	+
P9-60	Voltage recovery in instant stop mode	80%~100%	85%	+
P9-61	Voltage recovery judgment time in instant stop mode	0.0s~100.0s	0.5S	+
P9-62	Action voltage in instant stop mode	60%~100%	80%	+
P9-63	Load drop protection selection	0: Invalid; 1: Valid	0	#
P9-64	Load drop detection level	0.0~100.0%	10.0%	#
P9-65	Load drop detection time	0.0~60.0s	1.0s	#

Group PA - PID functions

Parameters	Name	Setting range	Factory default value	Attribute
PA-00	PID value setting	0: PA-01 setting 1: AI1 2: AI2 local potentiometer 3: AI3 external keyboard potentiometer 4: HDI pulse setting (DI5) 5: Communication setting 6: Multi-speed setting	0	#
PA-01	PID value setting	0.00%~100.0%	50.0%	#
PA-02	PID feedback source	0: AI1 1: AI2 local potentiometer 2: AI3 external keyboard potentiometer 3: AI1-AI2 4: HDI pulse setting (DI5) 5: Communication setting 6: AI1+AI2 7: MAX(|AI1|, |AI2|) 8: MIN(|AI1|, |AI2|)	0	#
PA-03	PID action direction	0: Positive effect; 1: Negative effect	0	#
PA-04	PID feedback range setting	1.00~65535	1000	#
PA-05	Proportional gain KP1	0.0~1000.0	20.0	#
PA-06	Integral time TI1	0.01s~10.00s	2.00s	#
PA-07	Derivative time TD1	0.000s~10.000s	0.000s	#
PA-08	PID reversal cutoff frequency	0.00 ~ Maximum frequency	0.00Hz	#
PA-09	PID bias limit	0.0%~100.0%	0.0%	#
PA-10	PID differential limit	0.00%~100.00%	0.10%	#
PA-11	PID change time setting	0.00~650.00s	0.00s	#

PA-12	PID feedback filtering time	0.00~60.00s	0.00s	#
PA-13	PID output filtering time	0.00~60.00s	0.00s	#
PA-14	Retain	-	0	#
PA-15	Proportional gain KP2	0~1000.0	20.0	#
PA-16	Integral time TI2	0.01s~10.00s	2.00s	#
PA-17	Derivative time TD2	0.000s~10.000s	0.000s	#
PA-18	PID parameter switching condition	0: No switching 1: Switching by input terminal 2: Automatic switching by bias 3: Automatic switching by running frequency	0	#
PA-19	PID parameter switching bias 1	0.0%~PA-20	20.0%	#
PA-20	PID parameter switching bias 2	PA-19~100.0%	80.0%	#
PA-21	Initial PID value	0.0%~100.0%	0.0%	#
PA-22	Holding time of initial PID value	0.00~650.00s	0.00s	#
PA-23	Retain	-	1.00%	#
PA-24	Retain	-	1.00%	#
PA-25	PID integral attribute	Units digit: Integral separation 0: Void; 1: Enable; Tens digit: Integration stop at output limit 0: Continue integration; 1: Stop integration	00	#
PA-26	PID feedback loss detection value	0.0%: No judgment of feedback loss 0.1%~100.0%	0.0%	#
PA-27	PID feedback loss detection time	0.0s~20.0s	0.0s	#
PA-28	PID stop operation	0: Stop without operation; 1: Stop with operation	1	#

Group Pb - Swing frequency, fixed length and count

Parameters	Name	Setting range	Factory default value	Attribute
Pb-00	Swing frequency setting mode	0: Relative to center frequency; 1: Relative to maximum frequency	0	#
Pb-01	Swing frequency amplitude	0.0%~100.0%	0.0%	#
Pb-02	Hopping frequency amplitude	0.0%~50.0%	0.0%	#
Pb-03	Swing frequency cycle	0.1s~3000.0s	10.0s	#
Pb-04	Triangular wave rise time of swing frequency	0.1%~100.0%	50.0%	#
Pb-05	Set length	0m~65535m	1000m	#
Pb-06	Actual length	0m~65535m	0m	#
Pb-07	Pulses per meter	0.1~6553.5	100.0	#

Pb-08	Set count	1~65535	1000	#
Pb-09	Specified count	1~65535	1000	#

Group PC - Multi-speed and simple PLC function

Parameters	Name	Setting range	Factory default value	Attribute
PC-00	Multi-speed 0	-100.0%~100.0%	0.0%	#
PC-01	Multi-speed 1	-100.0%~100.0%	0.0%	#
PC-02	Multi-speed 2	-100.0%~100.0%	0.0%	#
PC-03	Multi-speed 3	-100.0%~100.0%	0.0%	#
PC-04	Multi-speed 4	-100.0%~100.0%	0.0%	#
PC-05	Multi-speed 5	-100.0%~100.0%	0.0%	#
PC-06	Multi-speed 6	-100.0%~100.0%	0.0%	#
PC-07	Multi-speed 7	-100.0%~100.0%	0.0%	#
PC-16	Simple PLC running mode	0: Stops after a single run 1: Holding of final value at the end of a single run 2: Cyclic	0	#
PC-17	Simple PLC power-off memory selection	Units digit: Power off memory selection 0: Power-off without memory; 1: Power-off with memory Tens digit: Stop memory selection 0: Stop without memory; 1: Stop with memory	00	#
PC-18	Running time of PLC segment 0	0.0s(h)~6500.0s(h)	0.0s(h)	#
PC-19	Acceleration and deceleration time selection of PLC segment 0	0~3	0	#
PC-20	Running time of PLC segment 1	0.0s(h)~6500.0s(h)	0.0s(h)	#
PC-21	Acceleration and deceleration time selection of PLC segment 1	0~3	0	#
PC-22	Running time of PLC segment 2	0.0s(h)~6500.0s(h)	0.0s(h)	#
PC-23	Acceleration and deceleration time selection of PLC segment 2	0~3	0	#
PC-24	Running time of PLC segment 3	0.0s(h)~6500.0s(h)	0.0s(h)	#
PC-25	Acceleration and deceleration time selection of PLC segment 3	0~3	0	#

PC-26	Running time of PLC segment 4	0.0s(h)~6500.0s(h)	0.0s(h)	#
PC-27	Acceleration and deceleration time selection of PLC segment 4	0~3	0	#
PC-28	Running time of PLC segment 5	0.0s(h)~6500.0s(h)	0.0s(h)	#
PC-29	Acceleration and deceleration time selection of PLC segment 5	0~3	0	#
PC-30	Running time of PLC segment 6	0.0s(h)~6500.0s(h)	0.0s(h)	#
PC-31	Acceleration and deceleration time selection of PLC segment 6	0~3	0	#
PC-32	Running time of PLC segment 7	0.0s(h)~6500.0s(h)	0.0s(h)	#
PC-33	Acceleration and deceleration time selection of PLC segment 7	0~3	0	#
PC-34	Running time of PLC segment 8	0.0s(h)~6500.0s(h)	0.0s(h)	#
PC-35	Acceleration and deceleration time selection of PLC segment 8	0~3	0	#
PC-50	Unit of simple PLC running time	0: s; 1: h	0	#
PC-51	Multi-speed 0 setting mode	0: Parameter PC-00 setting 1: AI1 2: AI2 local potentiometer 3: AI3 external keyboard potentiometer 4: Pulse 5: PID 6: Set digital frequency (P0-08), modified by UP/DOWN	0	#

Group Pd - Communication parameters

Parameters	Name	Setting range	Factory default value	Attribute
Pd-00	Communication baud rate	Units digit: MODBUS 0: 300BPS 1: 600BPS 2: 1200BPS 3: 2400BPS 4: 4800BPS 5: 9600BPS 6: 19200BPS 7: 38400BPS	5	#

		8: 57600BPS 9: 115200BPS		
Pd-01	MODBUS data format	0: No check (8-N-2) 1: Even parity check (8-E-1) 2: Odd parity check (8-O-1) 3: No check (8-N-1) (valid for MODBUS)	3	#
Pd-02	Local machine address	0: Broadcast address; 1-247	1	#
Pd-03	MODBUS response delay	0~20ms	2	#
Pd-04	Serial communication timeout period	0.0: Invalid; 0.1-60.0s	0.0	#
Pd-05	MODBUS communication data format	Units digit: MODBUS 0: Non-standard MODBUS protocol 1: Standard MODBUS protocol	1	#
Pd-06	Communication current reading resolution	0: 0.01A (valid at 55kW or below) 1: 0.1A	0	#

Group PP - User password

Parameters	Name	Setting range	Factory default value	Attribute
PP-00	User password	0~65535	0	#
PP-01	Parameter initialization	0: no operation 1: Restore factory default parameters (excluding motor parameters) 2: Clear record information 3: Restore factory default value, including motor parameters 4: Current user parameter backup 501: Restore user backup parameters	0	+
PP-02	Function parameter group display selection	Units digit: Group U display selection 0: No display 1: Display Tens digit: Group A display selection 0: No display 1: Display	11	+
PP-04	Parameter modification attribute	0: Modifiable 1: Not modifiable	0	#

Group A5 - Control optimization parameters

Parameters	Name	Setting range	Factory default value	Attribute
A5-00	Upper limit frequency of DPWM switching	5.00 Hz ~ Maximum frequency	8.00Hz	#
A5-01	PWM mode	0: Asynchronous modulation; 1: Synchronous modulation	0	#

A5-02	Dead zone compensation mode selection	0: No compensation; 1: Compensation	1	#
A5-03	Random PWM depth	0: Random PWM inactive 1-10: Random depth of PWM carrier frequency	0	#
A5-04	Fast current limit enabled	0: Disabled; 1: Enabled	0	#
A5-05	Voltage overmodulation coefficient	100~110	105	+
A5-06	Undervoltage point setting	Three-phase 380-480V: 330.0V-420.0V; factory default value: 350.0V Single-phase 200-240V: 160.0V-330.0V; factory default value: 200.0V		#
A5-09	Overvoltage point setting	Three-phase 380-480V: 650.0V-820.0V; factory default value: 810.0V Single-phase 200-240V: 200.0V-420.0V; factory default value: 400.0V		+

Group U0 - Monitoring parameters

Parameters	Name	Smallest unit	Communication address
U0-00	Running frequency (Hz)	0.01Hz	7000H
U0-01	Set frequency (Hz)	0.01Hz	7001H
U0-02	Bus voltage (V)	0.1V	7002H
U0-03	Output voltage (V)	1V	7003H
U0-04	Output power (A)	0.01A	7004H
U0-05	Output power (kW)	0.1kW	7005H
U0-06	Output torque (%)	0.1%	7006H
U0-07	DI input status	1	7007H
U0-08	Retain		7008H
U0-09	AI1 voltage (V) / current (mA)	0.01V/0.01mA	7009H
U0-10	AI2 voltage (V)	0.01V	700AH
U0-11	AI3 external keyboard potentiometer voltage (V)	0.01V	700BH
U0-12	Count	1	700CH
U0-13	Length value	1	700DH
U0-14	Load speed	1rpm	700EH
U0-15	PID setting	1	700FH
U0-16	PID feedback value	1	7010H
U0-17	PLC stage	1	7011H
U0-18	Input pulse frequency (Hz)	0.01kHz	7012H
U0-19	Feedback speed (Hz)	0.01Hz	7013H

U0-20	Remaining running time	0.1min	7014H
U0-21	AI1 voltage (V) / current (mA) before correction	0.001V/0.01mA	7015H
U0-22	AI2 voltage before correction	0.001V	7016H
U0-23	AI3 external keyboard potentiometer voltage before correction	0.001V	7017H
U0-24	Linear speed	1m/min	7018H
U0-25	Current power-on time	1min	7019H
U0-26	Current running time	0.1min	701AH
U0-27	Input pulse frequency	1Hz	701BH
U0-28	Communication set value	0.01%	701CH
U0-30	Primary frequency display	0.01Hz	701EH
U0-31	Auxiliary frequency display	0.01Hz	701FH
U0-32	View any memory address value	1	7020H
U0-35	Target torque (%)	0.1%	7023H
U0-37	Power factor angle	0.1°	7025H
U0-39	Retain		7027H
U0-40	Retain		7028H
U0-41	Intuitive display of DI input status	1	7029H
U0-42	Retain		702AH
U0-43	Intuitive display of DI function status 1 (function 01-40)	1	702BH
U0-44	Intuitive display of DI function status 2 (function 41-80)	1	702CH
U0-45	Fault information	1	702DH
U0-59	Set frequency (%)	0.01%	703BH
U0-60	Running frequency (%)	0.01%	703CH
U0-61	Frequency converter status	1	703DH
U0-62	Current fault code	1	703EH
U0-65	Upper limit of torque	0.1%	7041H

Chapter Five Fault Diagnosis and Solutions

All possible faults and solutions are shown in 5.1. Before seeking technical support, users should conduct self-check and find fault details in the table. Please contact the vendor for services.

5.1 Faults and Solutions

In case of any fault of the frequency converter, the LED monitor with keyboard will show the fault code. Please identify possible causes and implement corresponding solutions according to fault code details.
Fault codes, phenomena and solutions are shown in the table below.

Fault display	Fault description	Cause	Solution
Err02	Acceleration overcurrent	Grounding or short circuit of the output circuit of frequency converter	Resolve external faults and check the motor and contactor for short circuit.
		SVC without parameter identification	Set motor parameters based on the motor nameplate, and conduct motor parameter identification.
		Rapid acceleration or too short acceleration time	Increase the acceleration time.
		Incorrect setting of overcurrent stall suppression	1. Make sure that the overcurrent stall suppression function (P3-19) is enabled. 2. The set overcurrent stall action current (P3-18) is too large. Adjustment between 120% and 150% is recommended. 3. The set overcurrent stall suppression gain (P3-20) is too low. Adjustment between 20 and 40 is recommended.
		Inappropriate manual torque lift or V/F curve	Adjust the manual torque lift or V/F curve.
		Enable the motor in the running status.	Choose to start speed tracking or start after the motor is shut down.
		External interference	Refer to historical fault records. If the current does not reach the overcurrent value when a fault occurs, identify the interference source. If there is no other interference source, the drive board or Hall sensor may be faulty.
Err03	Deceleration overcurrent	Grounding or short circuit of the output circuit of frequency converter	Resolve external faults and check the motor for short circuit or open circuit.
		SVC without parameter identification	Set motor parameters based on the motor nameplate, and conduct motor parameter identification.
		Rapid deceleration or too short deceleration time	Increase the deceleration time.
		Incorrect setting of overcurrent stall suppression	1. Make sure that the overcurrent stall suppression function (P3-19) is enabled. 2. The set overcurrent stall action current (P3-18) is too large. Adjustment between 120% and 150% is recommended. 3. The set overcurrent stall suppression gain (P3-20) is too low. Adjustment between 20 and 40 is recommended.
		No braking unit and resistor	Install a braking unit and resistor.

		External interference	Refer to historical fault records. If the current does not reach the overcurrent value when a fault occurs, identify the interference source. If there is no other interference source, the drive board or Hall sensor may be faulty.
Err04	Constant speed overcurrent	Grounding or short circuit of the output circuit of frequency converter	Resolve external faults and check the motor for short circuit or open circuit.
		SVC without parameter identification	Set motor parameters based on the motor nameplate, and conduct motor parameter identification.
		Incorrect setting of overcurrent stall suppression	1. Make sure that the overcurrent stall suppression function (P3-19) is enabled. 2. The set overcurrent stall action current (P3-18) is too large. Adjustment between 120% and 150% is recommended. 3. The set overcurrent stall suppression gain (P3-20) is too low. Adjustment between 20 and 40 is recommended.
		Low power of frequency converter	If the current exceeds the rated current of the motor or frequency converter in the steady running status, choose a frequency converter of higher power.
		External interference	Refer to historical fault records. If the current does not reach the overcurrent value when a fault occurs, identify the interference source. If there is no other interference source, the drive board or Hall sensor may be faulty.
Err05	Acceleration overvoltage	High input voltage	Adjust the voltage into the normal range.
		The motor is driven by external force during acceleration.	Remove additional power or install a brake resistor.
		Incorrect setting of overvoltage suppression	1. Make sure that the overvoltage suppression function (PP3-23) is enabled. 2. The set overvoltage suppression action voltage (P3-22) is too large. Adjustment between 700V and 770V is recommended. 3. The set overvoltage suppression gain (P3-24) is too low. Adjustment between 30 and 50 is recommended.
		No braking unit and resistor	Install a braking unit and resistor.
		Too short acceleration time	Increase the acceleration time.
Err06	Deceleration overvoltage	Incorrect setting of overvoltage suppression	1. Make sure that the overvoltage suppression function (PP3-23) is enabled. 2. The set overvoltage suppression action voltage (P3-22) is too large. Adjustment between 700V and 770V is recommended. 3. The set overvoltage suppression gain (P3-24) is too low. Adjustment between 30 and 50 is recommended.
		The motor is driven by external force during deceleration.	Remove additional power or install a brake resistor.
		Too short deceleration time	Increase the deceleration time.
		No braking unit and resistor	Install a braking unit and resistor.

Err07	Constant speed overvoltage	Incorrect setting of overvoltage suppression	1. Make sure that the overvoltage suppression function (PP3-23) is enabled. 2. The set overvoltage suppression action voltage (P3-22) is too large. Adjustment between 700V and 770V is recommended. 3. The set overvoltage suppression gain (P3-24) is too low. Adjustment between 30 and 50 is recommended.
		The motor is driven by external force during running.	Remove additional power or install a brake resistor.
Err08	Control power failure	The input voltage is not within the range specified in the specification.	Adjust the voltage into the range specified in the specification.
Err09	Undervoltage fault	Instant power failure	Enable the instant stop function (P9-59) to prevent undervoltage arising from instant power failure.
		The input voltage of the frequency converter is not within the range specified in the specification.	Adjust the voltage into the range specified in the specification.
		Abnormal bus voltage	Seek technical support.
		Fault of rectifier bridge, buffer resistor, drive board and control board	Seek technical support.
Err10	Converter overload	Too large load or motor stalling	Reduce the load and check the motor and other machinery.
		Low power of frequency converter	Choose a frequency converter with a large power.
Err11	Motor overload	Check whether the motor protection parameter P9-01 is set properly.	Set this parameter correctly.
Err13	Output phase loss	Motor fault	Check the motor for open circuit.
		Fault of the lead between frequency converter and motor	Resolve external faults.
		Three-phase output imbalance of the frequency converter	Check whether the three-phase winding of the motor is normal and resolve the fault.
		Fault of the drive board and IGBT module	Seek technical support.
Err14	Module overheat	The ambient temperature is too high	Reduce the ambient temperature.
		The air duct is blocked	Clean the duct.
		Damaged fan	Replace the fan.
		Damaged module thermistor	Replace the thermistor.
		Damaged inverter module	Replace the inverter module.
Err15	External equipment fault	External fault signal input through the multi-function terminal	Resolve external faults, confirm that the product can be restarted (P8-18), and reset it.
Err16	Communication fault	Abnormal running of upper computer	Check the wiring of the upper computer.
		Faulty communication cable	Check the communication cable.
		Incorrect setting of Pd group of communication parameters	Set communication parameters correctly.

		Try to restore factory default settings after finishing the aforesaid detection.	
Err17	Contactor fault	Fault of drive board and power supply	Replace the drive board or power module.
		Contactor abnormality	Replace the contactor.
		Abnormality of lightning protection board	Replace the lightning protection board.
Err18	Current detection fault	Check whether the Hall sensor is faulty.	Replace the Hall sensor.
		The driver board is abnormal	Replace the drive board.
Err19	Motor tuning fault	Inconsistency between motor parameter settings and nameplate	Set motor parameters correctly based on the nameplate.
		Parameter identification timeout	Check the lead between the frequency converter and motor.
Err21	EEPROM reading/writing fault	Damaged EEPROM chip	Replace the main control board.
Err23	Short circuit to ground	Motor short circuit to ground	Replace the cable or motor.
Err26	Cumulative running time reached	The cumulative running time reaches the set value.	Clear the record information by means of parameter initialization.
Err27	User-defined fault 1	Enter the signal of user-defined fault 1 through the multi-function terminal X.	Reset
Err28	User-defined fault 2	Enter the signal of user-defined fault 2 through the multi-function terminal X.	Reset
Err29	Cumulative power-on time reached	The cumulative power-on time reaches the set value.	Clear the record information by means of parameter initialization.
Err30	Load drop fault	The running current of the frequency converter is below P9-64.	Check whether the load is disconnected or whether the P9-64 and P9-65 parameters are set in accordance with the working conditions.
Err31	PID feedback loss in running	The PID feedback is less than the set value of PA-26.	Check PID feedback or adjust PA-26.
Err40	Cycle-by-Cycle current liming fault	Too large load or motor stalling	Reduce the load and check the motor and other machinery.
		Low power of frequency converter	Choose a frequency converter with a large power.
Err41	Motor switching fault in running	Change the motor through the terminal during frequency converter operation.	Change the motor after shutting down the frequency converter.
Err42	Too large speed deviation	No parameter identification	Conduct the motor parameter identification.
		The speed deviation is too large and the detection parameters P9-69 and P9-70 are set incorrectly.	Set detection parameters correctly based on the actual situation.
Err43		No parameter identification	Conduct the motor parameter identification.

	Motor overspeed fault	The motor overspeed detection parameters P9-69 and P9-70 are set incorrectly.	Set detection parameters correctly based on the actual situation.
Err55	Slave fault in master/slave control	The slave unit fails. Check it.	Conduct troubleshooting based on the slave fault code.
Err64	Module acceleration overcurrent	The same as Err02	-
Err65	Module deceleration overcurrent	The same as Err03	-
Err66	Constant-speed overcurrent of module	The same as Err04	-

Warranty Agreement

1 This product warranty period is twelve months (based on the fuselage bar type code information), during the warranty period, according to the normal use of the instructions, the product failure or damage, our company is responsible for free repair.

1 本产品保修期为十二个月（以机身条型码信息为准），保修期内按照使用说明书正常使用情况下，产品发生故障或损坏，我公司负责免费维修。

2 Within the warranty period, due to the following causes of damage, will receive a certain maintenance costs:

2 保修期内，因以下原因导致损坏，将收取一定的维修费用：

A, Machine damage due to errors in use and self repair and reconstruction without authorization;

A、因使用上的错误及自行擅自修理、改造而导致的机器损坏；

B, Damage caused by fire, flood, voltage anomaly, other natural disasters and two disasters;

B、由于火灾、水灾、电压异常、其它天灾及二次灾害等造成的机器损坏；

C, hardware damage caused by artificial falling and transportation after purchase;

C、购买后由于人为摔落及运输导致的硬件损坏；

D, Damage to the machine caused by the operation of the user's manual supplied by our company;

D、不按我司提供的用户手册操作导致的机器损坏；

E , Malfunction and damage caused by obstacles outside the machine (such as external equipment factors);

E、因机器以外的障碍（如外部设备因素）而导致的故障及损坏；

3, When the product failure or damage, please correct and detailed fill in "product warranty card" in the content.

3 产品发生故障或损坏时，请您正确、详细的填写《产品保修卡》中的各项内容。

4 The maintenance fee shall be charged according to the latest maintenance price list of our company.

4 维修费用的收取，一律按照我公司最新调整的《维修价目表》为准。

5 The warranty cards in general will not be reissued, honesty please keep this card and show it to the maintenance personnel in maintenance.

5 本保修卡在一般情况下不予补发，诚请您务必保留此卡，并在保修时出示给维修人员。

6 If there is any problem in the service process, please contact our agent or our company in time.

6 在服务过程中如有问题，请及时与我司代理商或我公司联系。.

Product Warranty Card

<table>
<tr><td rowspan="3">The customer information</td><td colspan="2">Company Address:</td></tr>
<tr><td rowspan="2">Company Name:</td><td>Contact Name:</td></tr>
<tr><td>Telephone Number:</td></tr>
<tr><td rowspan="3">Product information</td><td colspan="2">Model Number:</td></tr>
<tr><td colspan="2">Barcode of The Body (pasted here) :</td></tr>
<tr><td colspan="2">Agent Name:</td></tr>
<tr><td>Fault information</td><td colspan="2">(Maintenance Time and Content) :

Maintenance Personnel:</td></tr>
</table>